# Low Profile Ball Vise For Engraving and Jewelry Making

INSTRUCTIONS • #003-615

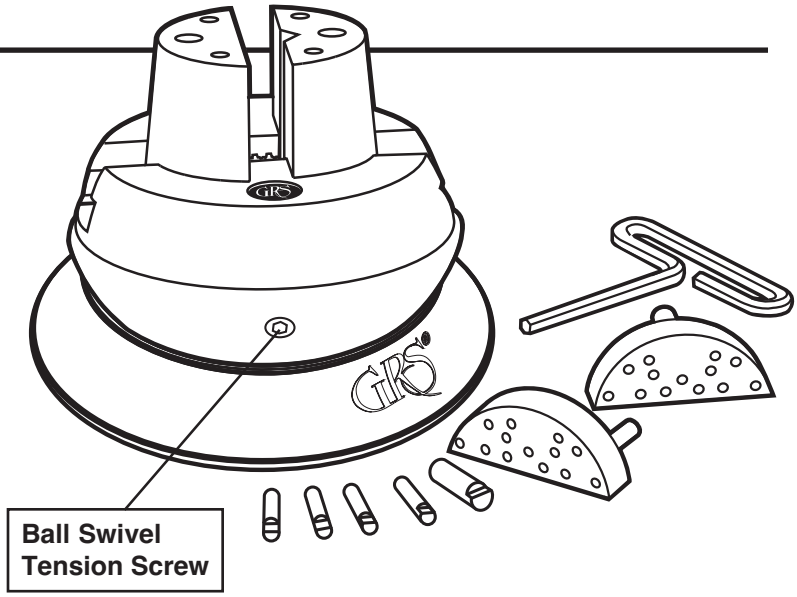


The GRS Low Profile Ball Vise will provide many years of trouble-free service. It is extremely rugged in construction, yet is relatively simple and easy to maintain. Required lubrication is minimal.

The jaw adapter plates are drilled to accept engraving block attachments. GRS offers an attachment set (#003-520) that includes storage for the adapter plates and pins that come with the block.

## Maintenance

Based on usage, open jaws fully and clean the dirt and metal pieces from the threads. After cleaning, apply a small amount of light oil to the threads.

Periodically wipe the vise and vise jaws with a lightweight oil to help prevent rust. All GRS vises are stainless steel except the ONE line vises. Although stainless steel is more rust-resistant, certain body chemistry can still cause it to rust.Recommended products include 3-IN-ONE oil, WD-40 Corrosion Inhibitor, and Super Lube Metal Protector.

## Vise Jaw Thread Replacement • #003-627 & #003-628

Overtightening the jaws will cause wear and damage to the threads. If jaws become loose, replace with kit #003-627. Remove the jaws by opening them as wide as possible until they come off the end of the jaw screw **(FIG. 1)**. The jaw thread pin is located on the underside of each jaw. NOTE: Before removing pins, locate the one with the “L”. This is the left hand thread pin and will need to be replaced with the same. Apply a small amount of synthetic grease (included in kit) to the O-rings and jaw screw before installing them. Lift the jaw screw out of the yoke and replace it. Note which side the left hand thread is on. Grease the threads and yoke well.

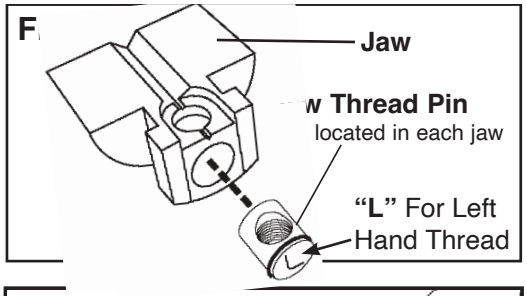


Start the jaw threads at the same time when replacing them **(FIG. 2)**. Hold each jaw in position and turn the jaw screw to close them. Either a large rubber band or a second person is useful to hold the jaws against the thread while the jaw screw is turned. If the jaws don’t meet at the same time in the center, remove them and try starting the threads at the same time again.

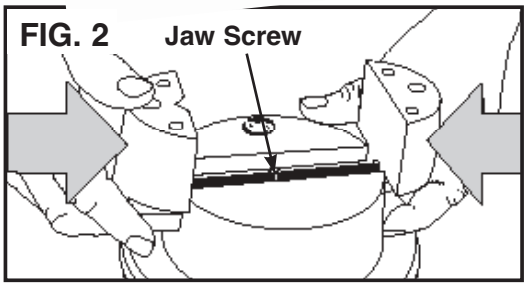


## Rotational Lock Replacement

The LOCK or DRAG PIN is subject to wear and may need replacement after extended use. Simply remove the ball swivel tension screw with the hex wrench. The Spring and Lock Pin should follow **(FIG. 3)**. If not, turn the ball until they fall out. Replace the Lock Pin (#003-046), Spring, and Tension Screw.

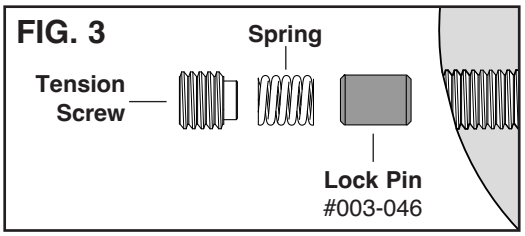


## Thread Pin Replacement Kit • #003-627

Includes Jaw Screw, Left and Right Thread Pins, O-Rings, and Tube of Synthetic Grease.

# Low Profile Ball Vise For Engraving and Jewelry Making

PARTS LIST • #003-615

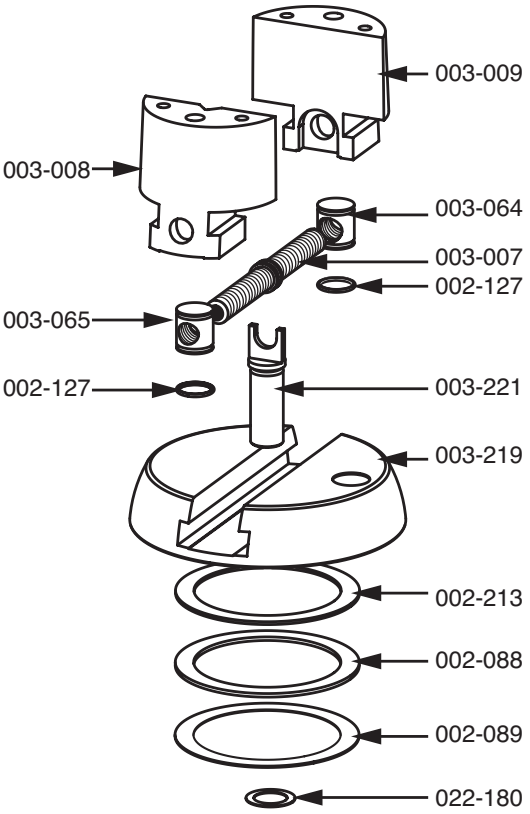


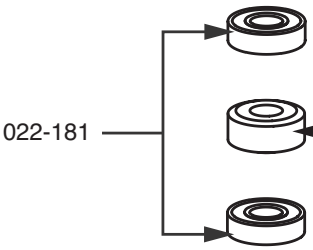


## GRS Low Profile Ball Vise Complete Assembly #003-615

| PART # | DESCRIPTION |
|---|---|
| 002-088 | Bearing 3" x 3.75" x 0.078" |
| 002-089 | Bearing 3" x 3.75" x 0.031" Race |
| 002-091 | Wrench - 1/4" T-Handle Hex |
| 002-112 | 5/16-8 x 3/4" HHB Z/P |
| 002-127 | O-Ring - 0.625" x 0.75" x 0.062" |
| 002-213 | Bearing 3" x 3.75" x 0.062" Race |
| 002-214 | Washer - 0.312" x 0.859" x 0.125" |
| 003-007 | Screw Post |
| 003-008 | Jaw - Left Hand |
| 003-009 | Jaw - Right Hand |
| 003-015 | Jaw Pin - 1/4" |
| 003-016 | Jaw Pin - 3/8" |
| 003-064 | Pin - Left Hand |
| 003-065 | Pin - Right Hand |
| 003-067 | 1/2 - 13 x 1/2 SSS Flt Pt HF Dog |
| 003-212 | Spring |
| 003-219 | Block Crown |
| 003-220 | Block Base |
| 003-221 | Post |
| 003-222 | Spacer |
| 003-223 | Lock Pin |
| 003-507 | Pin Plate - 2 pin |
| 003-508 | Pin Plate - 1 pin |
| 022-180 | Washer |
| 022-181 | Bearing 6203ZZ |
| 033-020 | Large Block Base Ring Plastic |
| 033-021 | Large Block Base Ring Rubber |

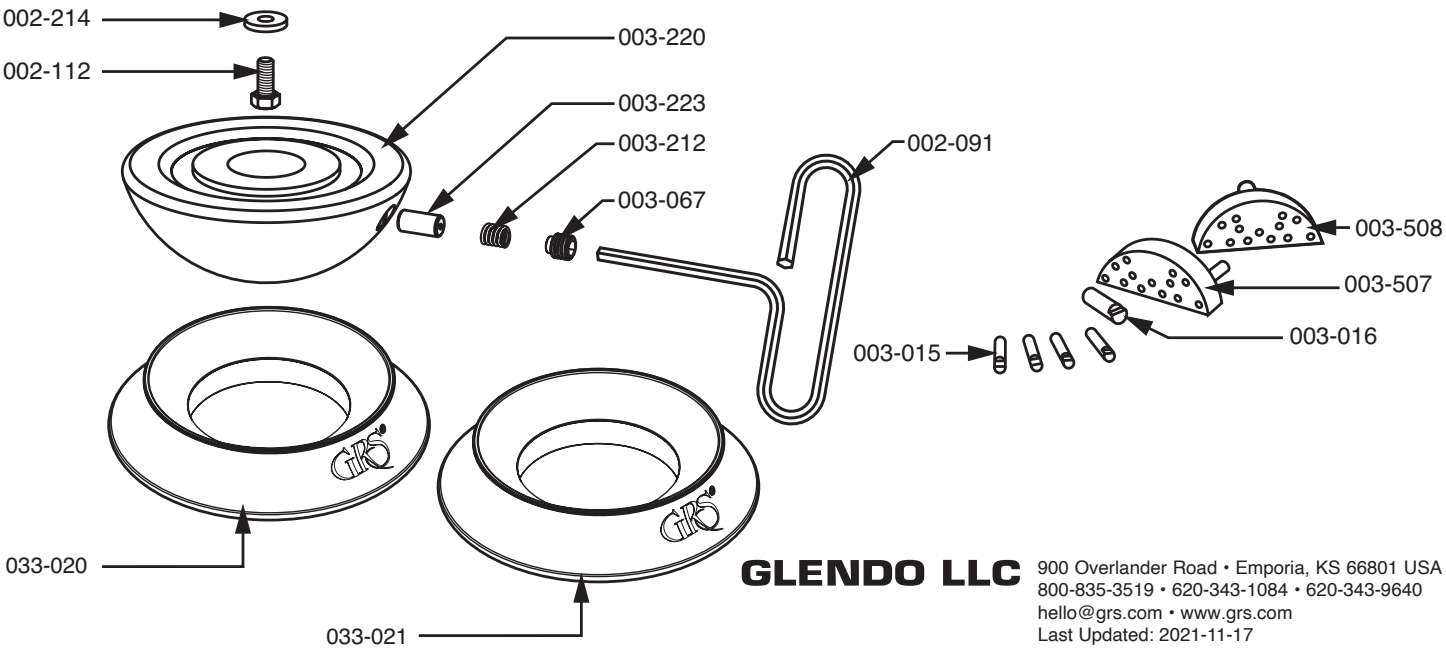


**GLENDO LLC** 900 Overlander Road • Emporia, KS 66801 USA
800-835-3519 • 620-343-1084 • 620-343-9640
hello@grs.com • www.grs.com
Last Updated: 2021-11-17